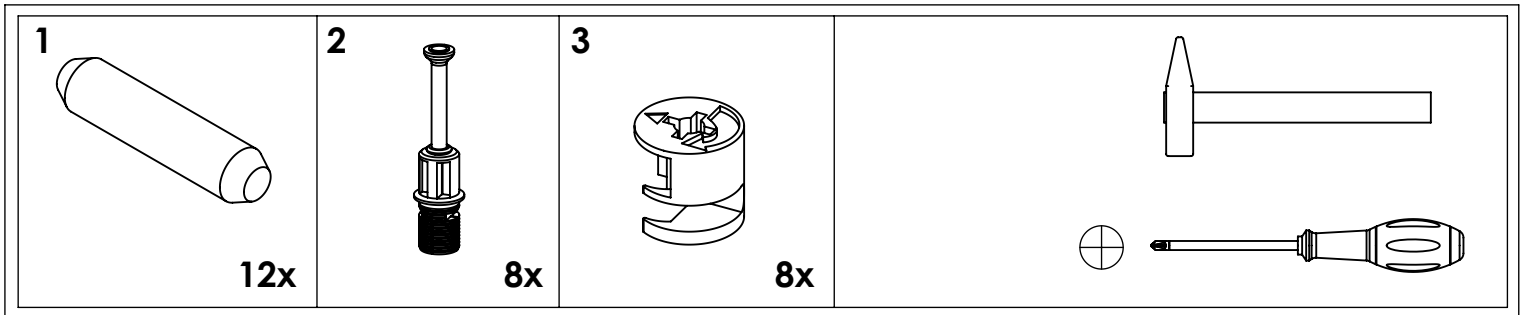
1
12x
2
8x
3
8x

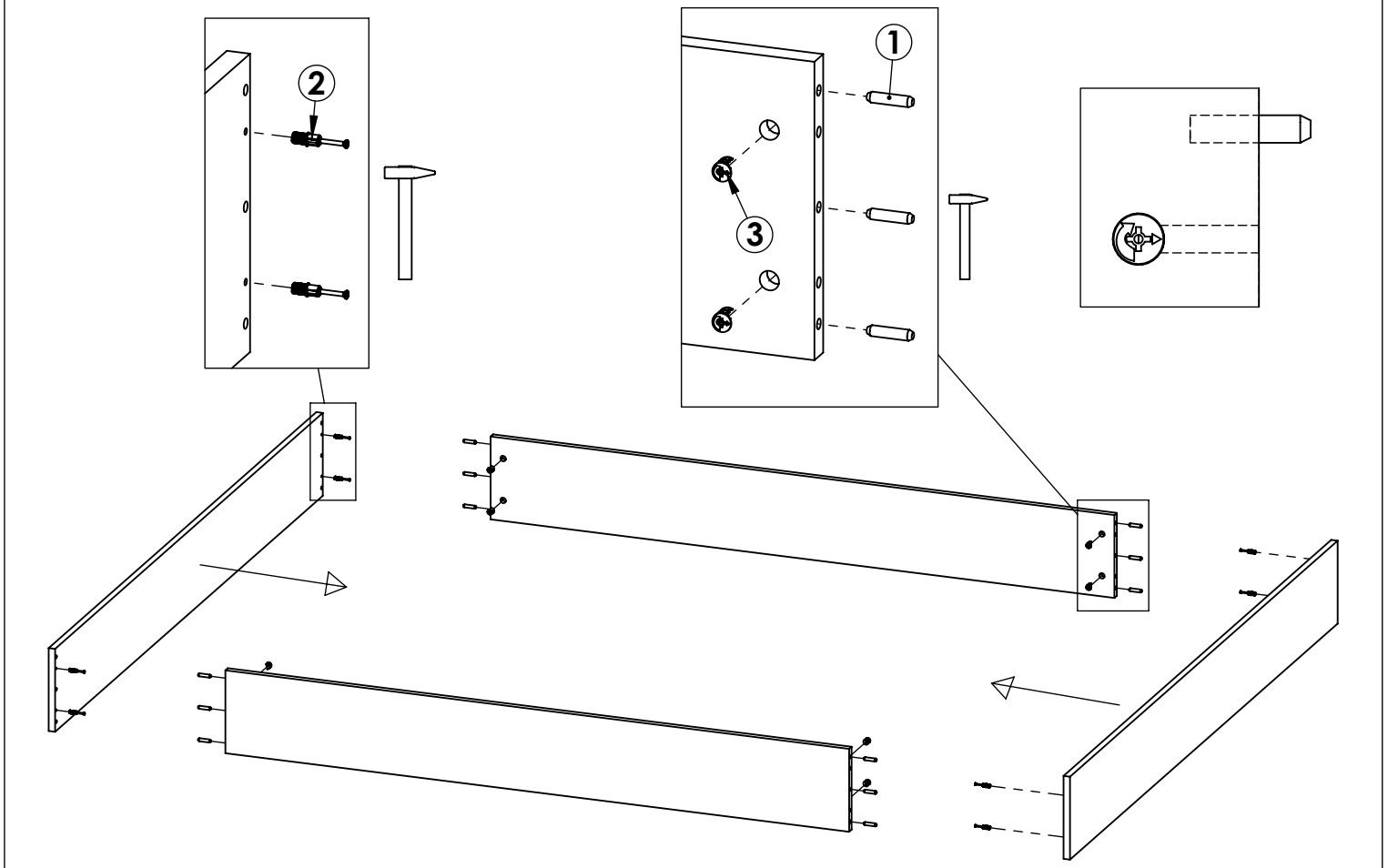
2
1
3

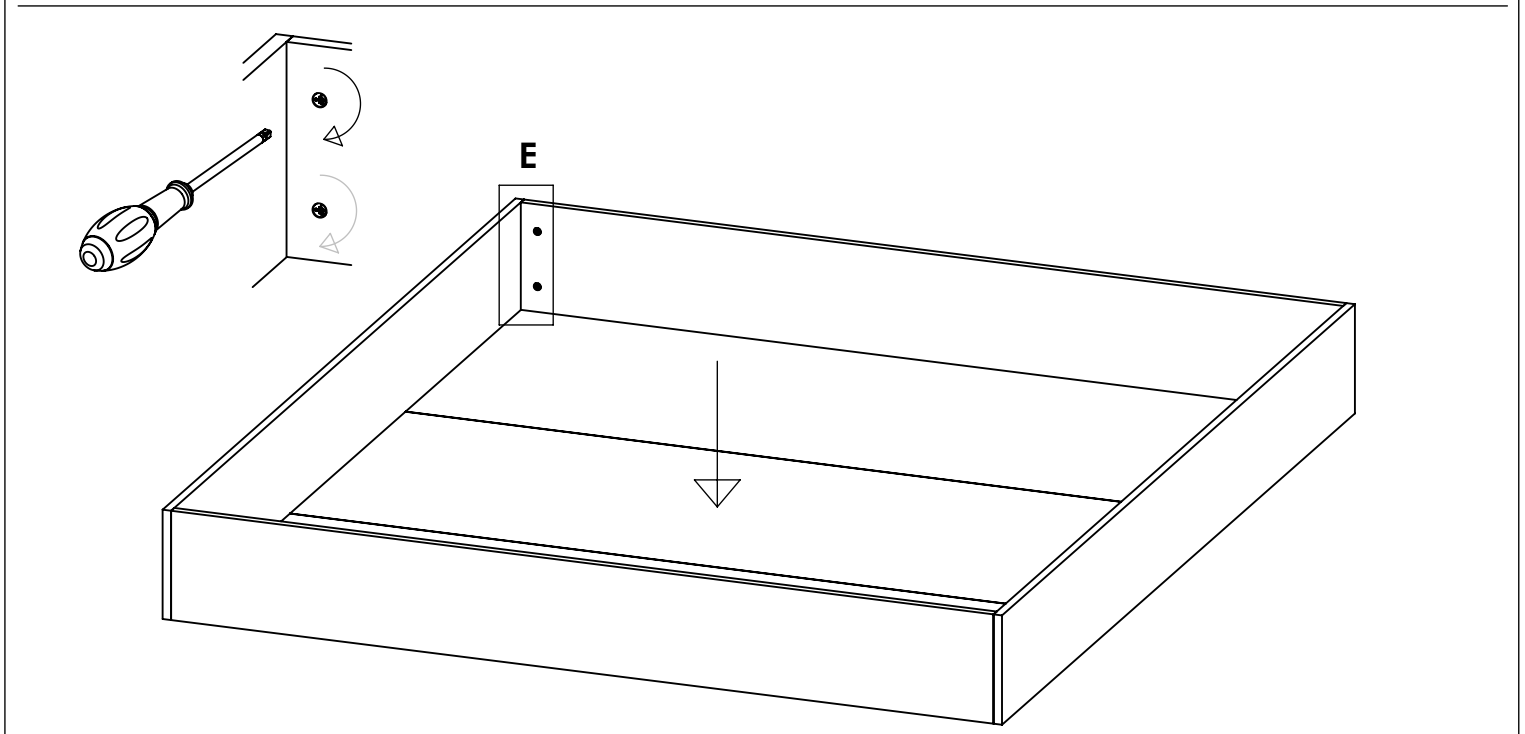
E